2003T

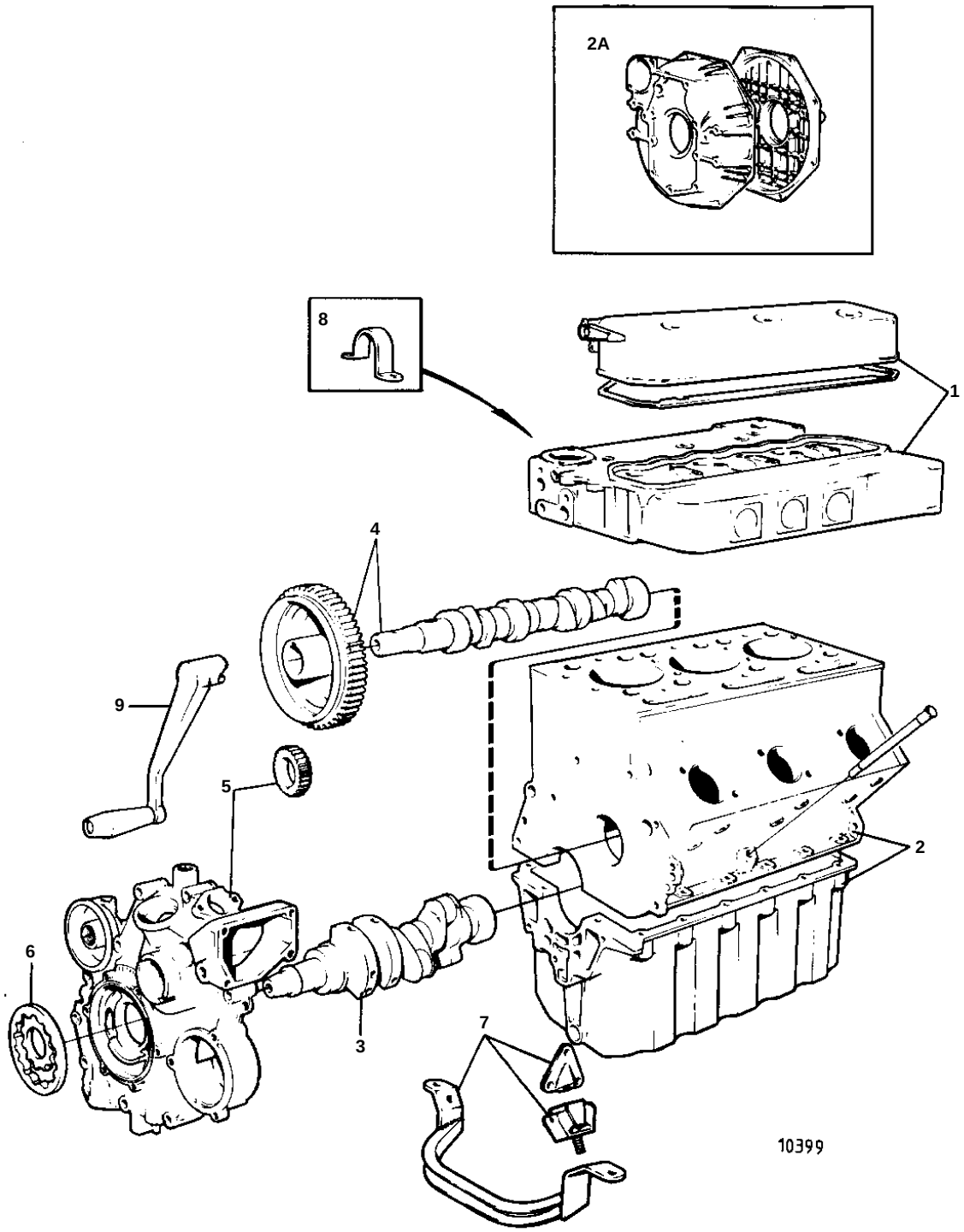

2003T

REF	QTY	DESCRIPTION		SEE SEC.	NOTES
1	1	CYLINDER HEAD			SN-2300046182
				02A-4600	
	1	CYLINDER HEAD			SN2300046183-
				02A-4620	
2	1	CYLINDER BLOCK		02A-5380	
2A	1	FLYWHEEL COVER		02A-5800	
3	1	CRANKSHAFT AND RELATED PARTS		02A-6700	
4	1	CAMSHAFT AND VALVE MECHANISM		02A-7200	
5	1	TIMING GEAR COVER AND GEARS		02A-8200	
6	1	LUBRICATING SYSTEM		02A-8700	
7	1	ENGINE MOUNTS		02A-9500	
8	1	LIFT IRON			SEE GROUP 2B
9	1	STARTING CRANK			SEE GROUP 9. MISCELLANEOUS EQUIPMENT.